The clutch should be adjusted at the 500 mile (800km), 5000 mile (8000km) and every 5000 miles thereafter.
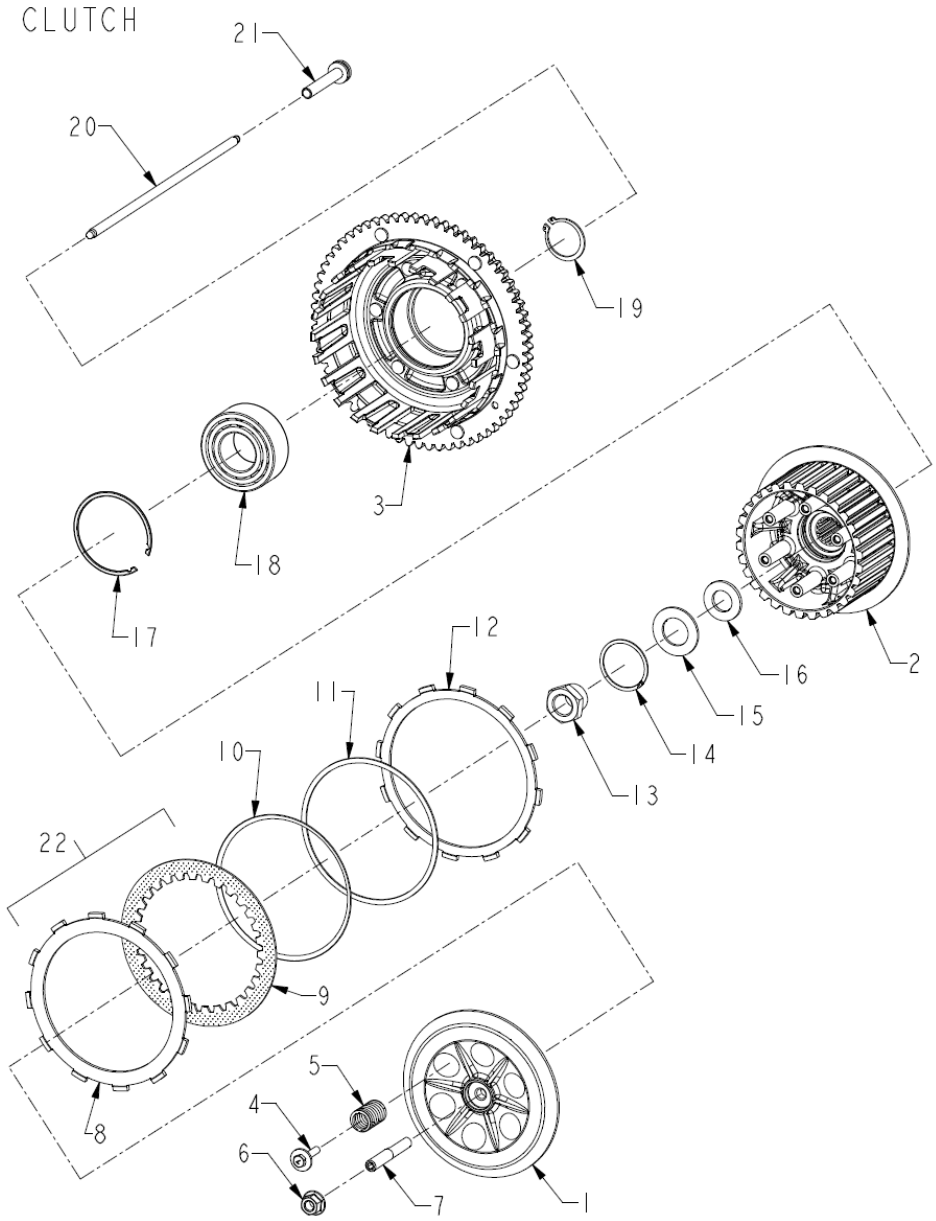
1. Place motorcycle on lift and ensure motorcycle is level
2. Remove clutch inspection cover from primary chaincase housing.
3. Remove locknut (#6) on adjuster.
4. Turn adjuster (#7) inward until it is lightly seated.
5. Turn adjuster out 3/4 to 1 ½ turns out
6. Tighten locknut (#6) to 20-24 ft lbs while holding adjuster (#7)
7. Install clutch inspection cover and gasket
8. Torque to 95-115 inch lbs.